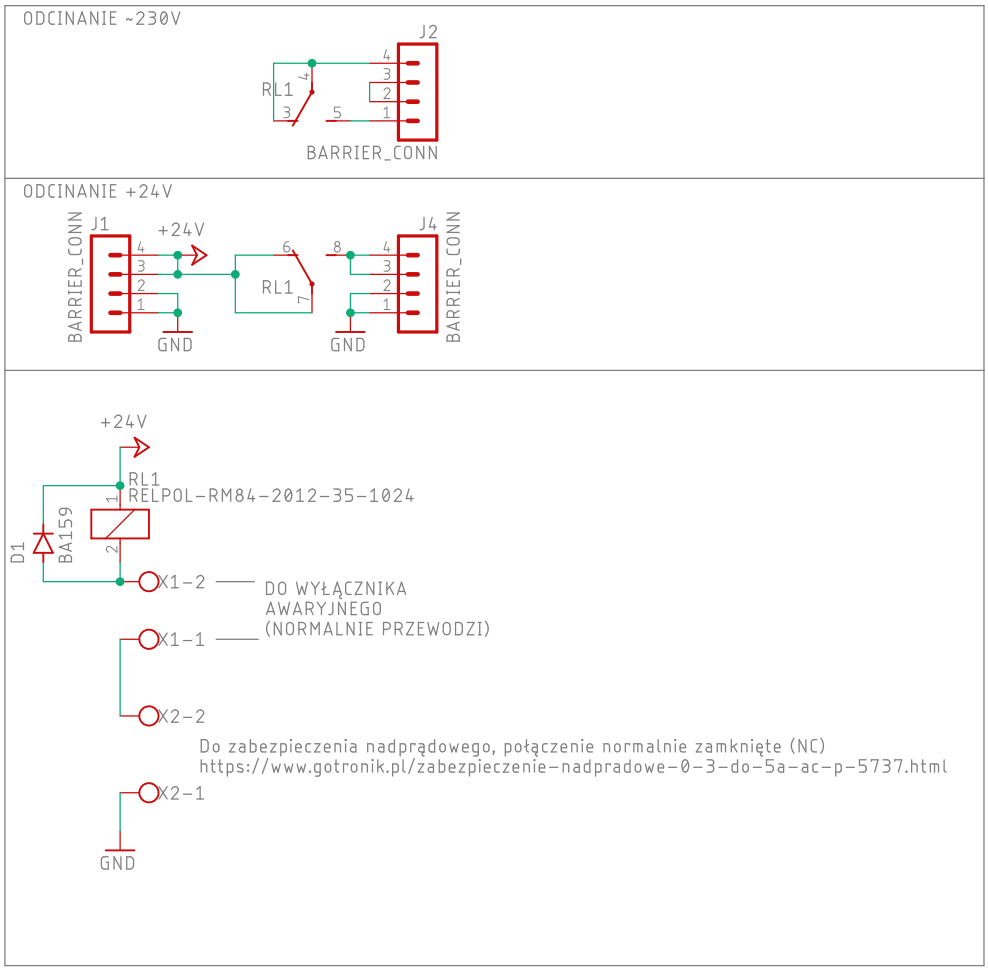

H3
MOUNT-HOLE3.2

H2
MOUNT-HOLE3.2

H1
MOUNT-HOLE3.2